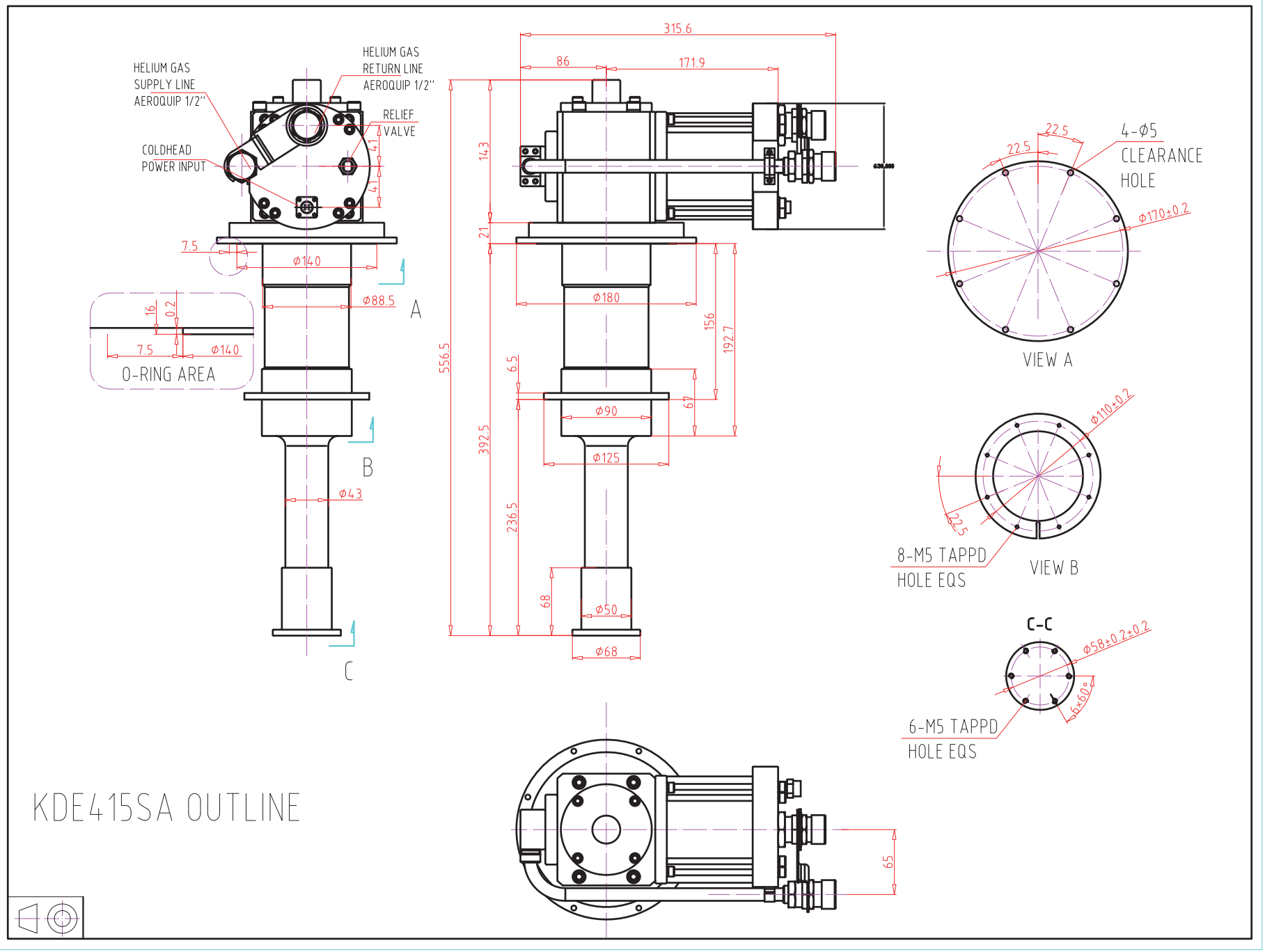
HELIUM GAS
SUPPLY LINE
AEROQUIP 1/2"
HELIUM GAS
RETURN LINE
AEROQUIP 1/2"
RELIEF
VALVE
COLDHEAD
POWER INPUT
41
41
7.5
ø140
ø88.5
A
16
0.2
7.5
ø140
O-RING AREA
B
ø43
C
315.6
86
171.9
143
21
556.5
392.5
236.5
6.5
68
ø180
156
192.7
67
ø90
ø125
ø50
ø68
22.5
22.5
4-ø5
CLEARANCE
HOLE
ø170±0.2
VIEW A
ø110±0.2
22.5
8-M5 TAPPD
HOLE EQS
VIEW B
C-C
ø58±0.2±0.2
6×60°
6-M5 TAPPD
HOLE EQS
65
KDE415SA OUTLINE